02.450mm Drawer Unit X2

(Inset Drawers)

(Carcass : 18mm Birch ply - Lacquered)
(Drawer fronts : 18mm Birch ply - Fenix Laminated)

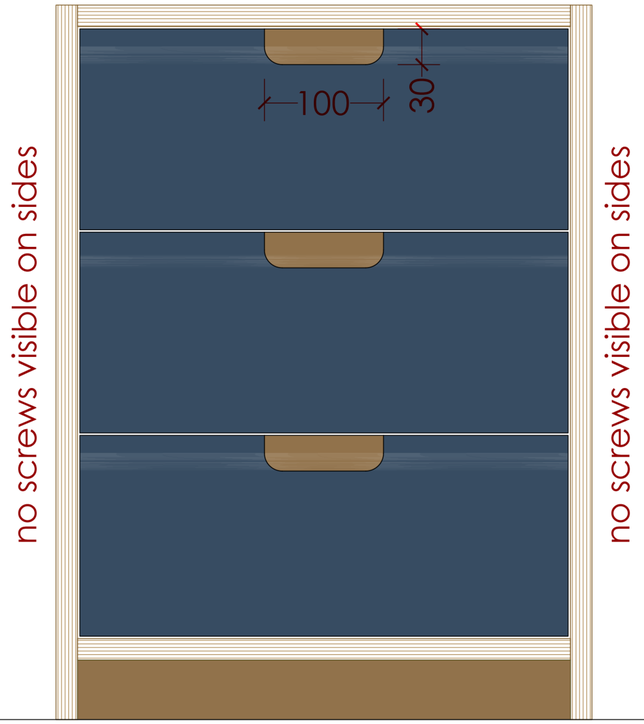

ELEVATION

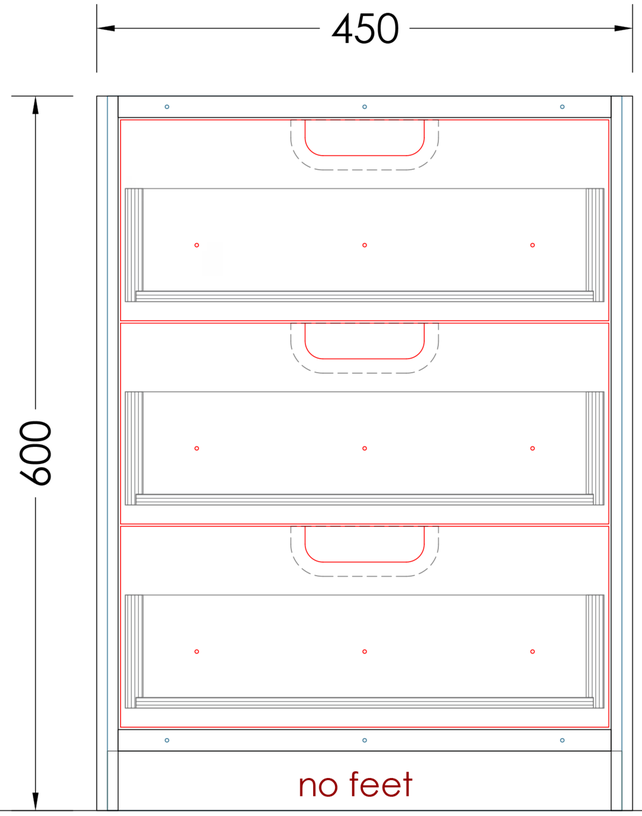

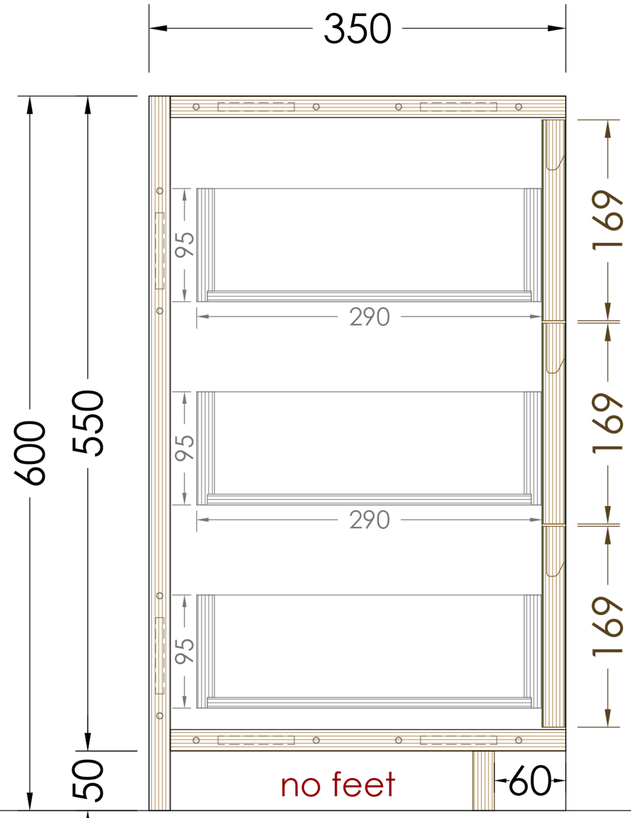

SECTION

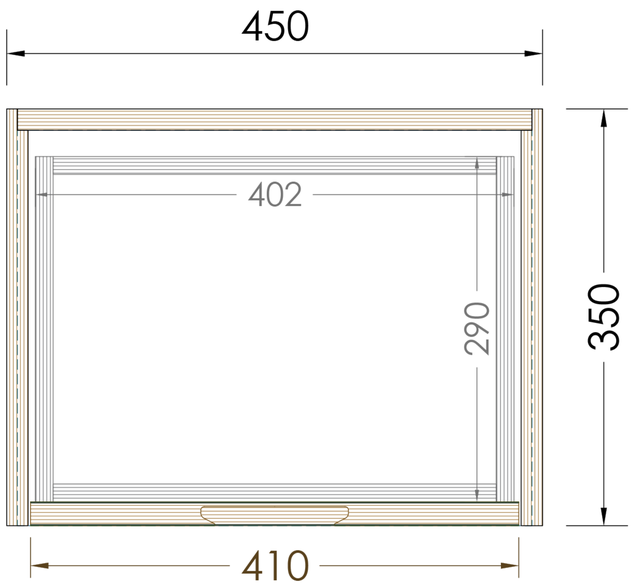

PLAN

LAMINATE AND PLY.COM